THE DRAWINGS AND INFORMATION CONTAINED HEREIN ARE THE EXCLUSIVE PROPERTY OF ACTEL.
THE INFORMATION, DRAWINGS AND DESIGN CONCEPTS CONTAINED HEREIN ARE CONFIDENTIAL/PROPRIETARY, SHALL BE MAINTAINED IN STRICT CONFIDENCE, AND SHALL NOT BE RELEASED TO ANY THIRD PARTY WITHOUT THE EXPRESS WRITTEN PERMISSION OF ACTEL.

ECN NO.	REV.	DESCRIPTION OF CHANGE	EFFECTIVE DATE	ORIGINATOR
980379	0	Initial	12/15/98	R. Kuang

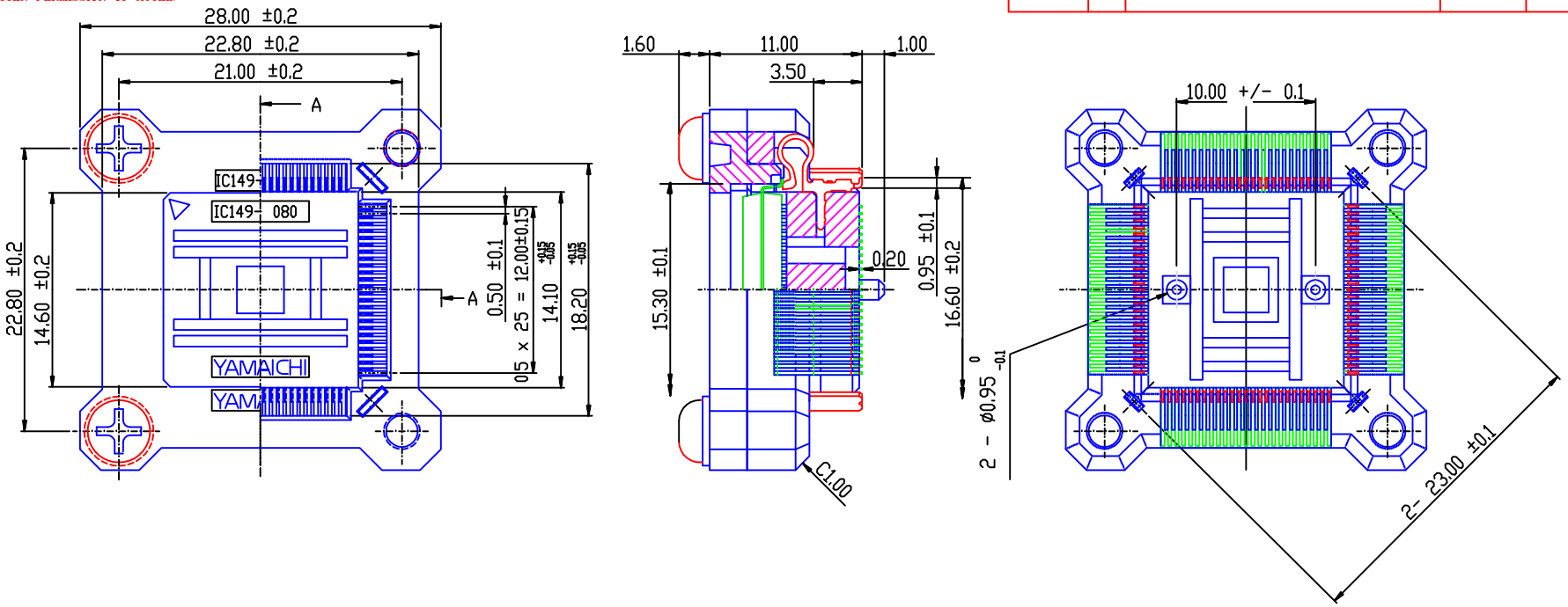

Notes:

1. Controlling dimensions are in millimeters.
2. Yamaichi socket number IC149-080-151-S5.

UNLESS OTHERWISE SPECIFIED DIMENSIONS ARE IN MILLIMETERS
DECIMAL X.X ±0.10 X.XX ±0.05 X.XXX ±0.03
ANGULAR ±1°

MATERIAL: SEE NOTES
FINISH: SEE NOTES
DO NOT SCALE DRAWING

PROJECTION

APPROVALS	DATE
DRAWN R. Kuang	9/9/98
CHECKED	
ENG'R	
RELEASED	

ACTEL CORP 955 E ARQUES AVE SUNNYVALE CA 94086

TITLE
Yamaichi VQ80
Surface Mount Socket-alignment pins

SIZE	VENDOR NAME	ACTEL DWG. NUMBER	REV
	Yamaichi	1-07-09034	0
B	VENDOR SID(PART) NUMBER: IC149-080-151-S5	VENDOR DWG. NUMBER: N/A	REV
Actel Part#: SY-VQ80-2	SCALE: NONE	SHEET 1 OF 2	

ACTEL CONFIDENTIAL

1-06-13016 REV 1 (SHEET 1 OF 2)